Standard Table Installation Manual

Tools Required: Allen Key 6mm (not included)
Philips head screw driver (not included)

1

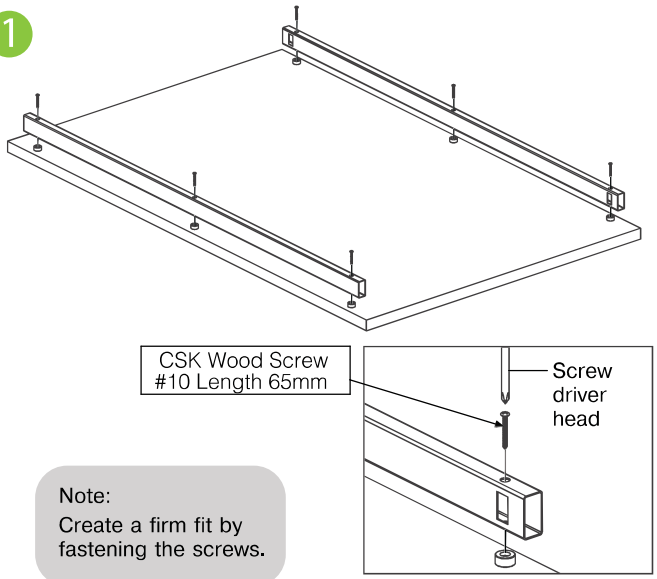

Note:
Create a firm fit by fastening the screws.

2

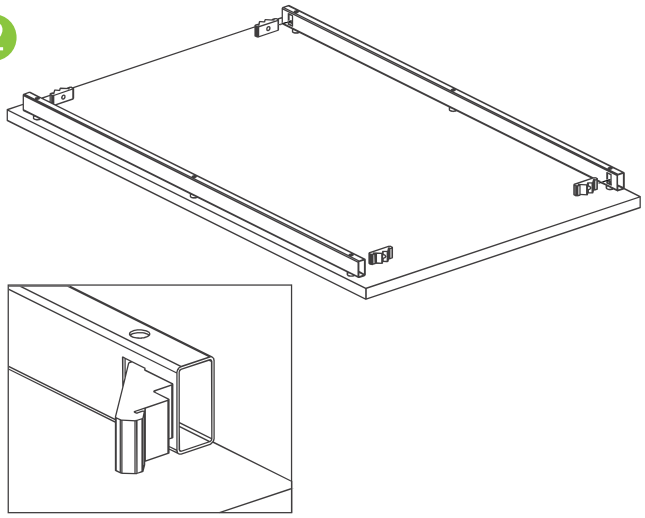

3

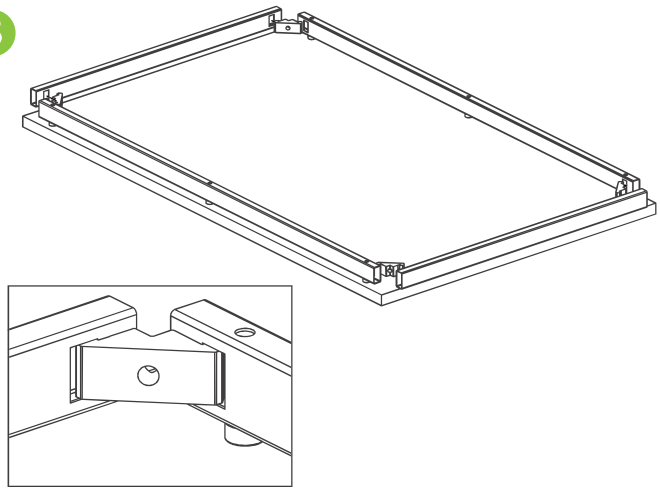

4

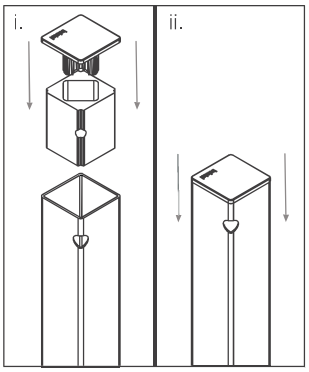

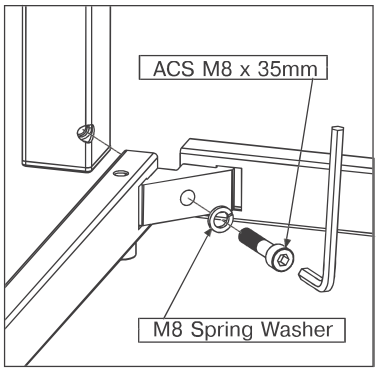

i. Insert plastic cap into Top cap extrusion firmly.
ii. Insert all into leg.

Note:
Create a firm fit by fastening the screws.

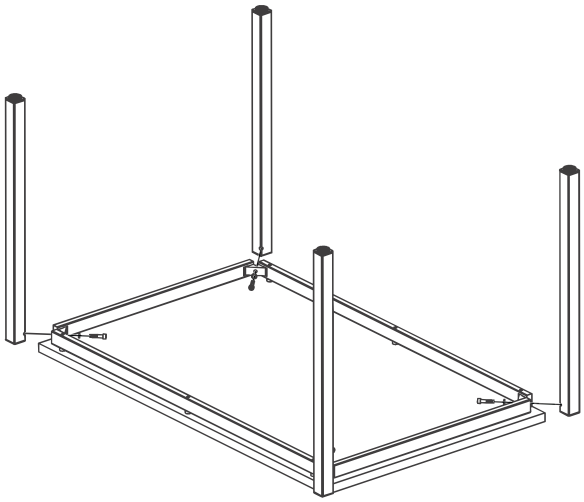
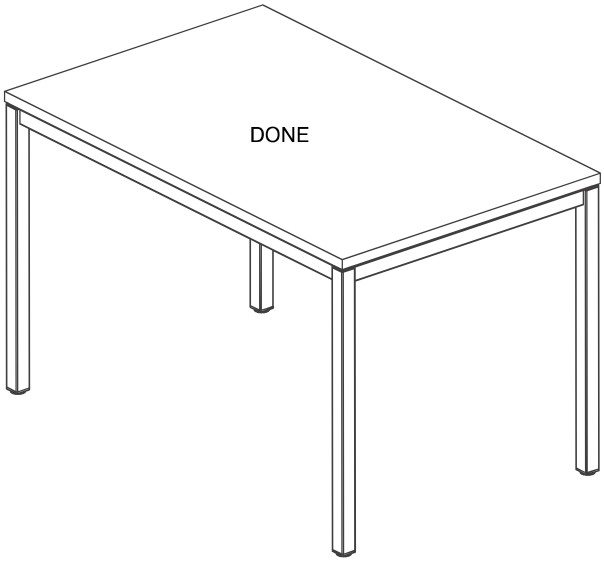
5